VENTURA COUNTY FIRE PROTECTION DISTRICT
FIRE PREVENTION BUREAU
165 DURLEY AVENUE
CAMARILLO, CALIFORNIA 93010
www.fire.countyofventura.org
(805) 389-9738

STANDARD 14.7.1

FIRE PROTECTION SYSTEMS INSTALLATION OF RESIDENTIAL SPRINKLERS

The information contained in this standard is provided solely for the convenience of the reader and was being enforced by the Ventura County Fire Protection District at the time of its publication. The District reserves the right to make changes and improvements to this standard as and when required by law, or otherwise, at any time. (The District's current standards will be posted and made available for downloading by the public at the following web site: http://fire.countyofventura.org.)

Please note that the District assumes no liability for any damages incurred directly or indirectly as a result of any errors, omissions, or discrepancies between this standard and any applicable law. It is the sole responsibility of the person or persons conducting any work pursuant to this standard to ensure their work complies with any and all applicable codes, ordinances, and regulations.

CHAPTER 1 ADMINISTRATION

1.1 Scope. This standard applies to the design and installation of automatic fire sprinkler systems in one and two-family dwellings and manufactured homes within the jurisdiction of the Ventura County Fire Protection District (VCFPD). This standard shall be used in conjunction with the current adopted editions of the Ventura County Fire Code (VCFC), the California Residential Code (CRC), NFPA 13D and any other applicable standards.

1.2 Purpose. This standard is prepared for the use and guidance of those charged with designing, installing, inspecting, approving or maintaining residential fire sprinkler systems.

1.3 Responsibility.

1.3.1 General. All individuals and companies who intend to engage in the installation or alteration of fire sprinkler systems are subject to the requirements of this standard.

1.3.2 Design and Installation. The design and installation of a fire protection system, excluding an electrical alarm system, for a one or two-family dwelling and outside the dwelling up to the utility meter for the property may be installed by any of the following:

1) A contractor holding a fire protection contractor classification (C-16).

2) A contractor holding a plumbing contractor classification (C-36).

3) An owner-builder of an owner-occupied, single-family dwelling, if not more than two single-family dwellings on the same parcel are constructed within one year.

1.4 Permits. A construction permit is required for the installation of or modification to a residential automatic fire sprinkler system as required by the VCFC.

1.4.1 Construction permits shall automatically become invalid unless an inspection authorized by such permit is commenced within 6 months of being issued.

1.4.2 Construction permits shall require an inspection at a minimum of every 6 months or such permit shall become invalid.

1.4.3 Construction permits that have become invalid may be re-issued, if all of the following conditions are met:

1) The permit was issued or an inspection has occurred within the previous 12 months.

2) No changes have been made or will be made in the original construction documents.

3) Previously approved construction documents shall be submitted to VCFPD.

4) Fees equal to one-half the amount for a new permit have been paid.

CHAPTER 2 DEFINITIONS

2.1 General. The following words and terms shall, for the purpose of this standard and permit requirements of the VCFC, have the meanings shown herein.

2.2 Ventura County Fire Code (VCFC). The current adopted VCFPD Ordinance consisting of the current adopted edition of the California Fire Code; portions of the current adopted edition of the International Fire Code; and the VCFPD amendments thereto.

CHAPTER 3 WATER SUPPLY

3.1 General. All fire sprinkler systems, regardless of the water supply source, shall have a single supply main serving both the fire sprinkler system and the domestic water system.

3.2 Dedicated Fire Line. When approved by the Authority Having Jurisdiction, a dedicated fire line may be connected prior to or after the water meter with one main shut-off valve, located in the meter box, painted red, controlling both domestic and fire sprinklers. In such case the following requirements shall apply.

3.2.1 Dedicated underground fire line shall be Blazemaster CPVC or equivalent.

3.3 Water Supply Source. The following water supply sources shall be considered to be acceptable:

1) A connection to a reliable waterworks system with or without an automatically operated pump.

2) An elevated tank.

3) A pressure tank designed to American Society of Mechanical Engineers (ASME) standards for a pressure vessel with a reliable pressure source.

4) A stored water tank with an automatically operated pump.

3.4 Stored Water. Where stored water is used as the sole source of supply, the required sprinkler demand shall be stored in an aboveground tank.

CHAPTER 4 AUTOMATIC BOOSTER PUMPS

4.1 General. Where a pump is the source of pressure for the water supply, it shall be for both the fire sprinkler system and the domestic system.

4.2 Activation. The pump must be activated automatically upon system demand.

4.3 Priming. The pump must be of self-priming type.

4.4 Listing. The pump must be listed or approved for electrical safety by a recognized testing laboratory.

4.5 Exposure. When a pump is used, provisions shall be made to protect the pump from exposure to freezing and/or brush fires.

CHAPTER 5 WATER STORAGE TANKS

5.1 Plans. Separate plans with fees shall be submitted for review.

5.1.1 Refer to Ventura County Fire Protection District Standard 14.5.4, Residential Water Supplies, for applicable permits and installation details.

CHAPTER 6 SYSTEM COMPONENTS

6.1 Main Control Valve. Each system shall have a main control valve located on the system side of the water meter or pump. The main control valve shall be of the indicating type such as an O.S.&Y. or ball valve. The valve shall control both the domestic water system and the automatic fire sprinkler system. The main control valve shall be readily accessible and above grade.

> ***Exception:*** *When approved by the Authority Having Jurisdiction, the main control valve may be placed in the meter box. In such case, a sign shall be posted by the riser to indicate its location.*

6.2 Domestic Valve. A separate shut-off valve for the domestic shall be provided.

6.3 Check Valve. An approved rubber faced check valve shall be located on the system side of the main control valve.

6.4 Signage. All valves shall have an all-weather sign affixed to them, which indicate their purpose.

6.5 Relief Valve. For systems with normal operating pressure in excess of 100 psi, a listed pressure relief valve shall be installed on the riser.

CHAPTER 7 OVERHEAD SPRINKLER DESIGN

7.1 Sprinklers. Only new residential sprinklers shall be installed.

7.2 Garages. Attached garages shall be protected with residential sprinklers.

7.3 Design Criteria. For situations not meeting one of the conditions listed in NFPA 13D, Sections 10.2.1 and 10.2.3, the number of sprinklers in the design area shall include all sprinklers within a compartment, to a maximum of three (3) sprinklers that require the greatest hydraulic demand. See Exhibit B for further details.

CHAPTER 8 PLANS SUBMITTAL

8.1 General. Plans and specifications shall be submitted to VCFPD, Fire Prevention Bureau as indicated elsewhere in this standard.

8.1.1 Obtain any permits from the appropriate **Building & Safety Department** to install the fire sprinkler system.

8.2 Plans and Specifications Submittal. At the time of building permit application for new structures designed to accommodate residential fire sprinklers, or for any installation of or modification to an automatic fire sprinkler system, plans and specifications shall be submitted for review and approval. In addition to the information required by the applicable standard, the submittal shall include the information specified herein. Once approved, a copy of the approved plan shall be maintained on the premises.

8.2.1 Plans and specifications shall not be required to be submitted for review and approval when there is an addition or a modification to an existing sprinklered building of 10 sprinklers or less. Permits, inspections and fees shall be required regardless or number of sprinklers.

8.3 Submittal Requirements. Submit a minimum of three sets of plans, hydraulic calculations, Fire Prevention Bureau transmittal form and the appropriate fees to the Ventura County Fire Protection District's Fire Prevention Bureau located at 165 Durley Avenue, Camarillo, CA 93010. Fire Prevention Counter hours are Monday through Friday, 8:00 a.m. to 5:00 p.m.

8.4 Fees. Appropriate fees can be found in the Ventura County Fire Protection District's Fee Schedule at http://fire.countyofventura.org or by calling the Fire Prevention Counter at (805) 389-9738. Fees can be paid by check/money order, Visa or Mastercard. Plan check fees include the original plan check and one re-check. Please ensure that all corrections are made prior to re-submission to avoid additional fees.

8.5 Plan Approval. Plans will be checked and if approved, will be stamped **"Acceptable"**, signed, and dated. The Fire Prevention Bureau will retain one set.

8.6 Record Number. The Fire Department has instituted the use of a **"Record Number"** for tracking all projects submitted for review. To provide faster customer service, please refer to your Record Number when contacting this Department. Your Record Number will also be listed on the Fire Department approved plans.

8.7 Field Changes. Field changes may require re-submittal of plans along with additional plan check fees.

CHAPTER 9 PLANS SPECIFICATIONS

9.1 Specifications. Specifications for residential automatic fire sprinkler systems shall be drawn with care by a trained person.

9.2 Size and Scale. Plans shall be drawn on a minimum of 24" x 36" paper and shall be drawn to an indicated scale of not less than 1/8 inch = 1 foot.

9.3 Plans. The following items shall be included in all residential automatic fire sprinkler system plan specifications:

1) Scope of work for the project.

2) Name of owner and/or occupant.

3) Location of the project, including assessor's parcel number (APN), street, number and city.

4) Name of water purveyor if applicable.

5) Name of sprinkler installer, address, phone number, type of license and license number.

6) Plot plan showing tank, pump, structures, underground pipe size and type, point of supply connections, depth of bury, type and size of any valves or meters.

7) Piping plan showing tank, pump, and structure elevations as they relate to each other.

8) Full height cross-section showing building construction types, sloped, and beamed ceiling locations.

9) Riser detail showing system split, pressure gauge, check valve, main control valve, relief valve (where applicable), main drain and domestic shut-off valve.

10) Indicate the manufacturer, model, type and pump curve of the booster pump (where applicable).

11) Detailed calculations.

12) Sprinkler head spacing.

13) Show clearly all non-sprinklered areas.

14) Indicate manufacturer, style, model, orifice size and "K" factor of each sprinkler used.

15) The main drain shall be a minimum ½ inch.

16) Type and size of each pipe.

17) Hanger detail.

18) Indicate type of fitting used.

19) The main control valve shall be located above grade and readily accessible.

20) Use of each room.

21) Location of heat sources.

22) Water flow information including: Flow location, static pressure (psi), residual pressure (psi), flow (gpm), date, time and who conducted the test or supplied the information.

9.4 Hydraulic Calculations. The following information shall be contained in the hydraulic calculations:

1) Calculations must conform to manufacturer's specifications.

2) "K" factors for all sprinklers.

3) “C” values for the type of pipe used.

4) A pump curve or city supply curve, where the total demand point is clearly plotted.

CHAPTER 10 VERBATIM NOTES

10.1 Verbatim Notes. The following notes shall be completed and placed verbatim on the working sprinkler plans.

10.1.1 Construction permits shall automatically become invalid unless an inspection authorized by such permit is commenced within 6 months of being issued.

10.1.2 Construction permits shall require an inspection at a minimum of every 6 months or such permit shall become invalid.

10.1.3 This residential sprinkler system shall be designed and installed as per NFPA 13D-2013 or the 2013 CRC Section 313.3 and Ventura County Fire Protection District regulations.

10.1.4 Only listed and approved devices shall be installed in this system (except tanks).

Exception: *Unless approved by an engineer.*

10.1.5 Only new listed residential sprinklers shall be employed in the installation of this sprinkler system.

10.1.6 All piping shall be provided with hangers and shall be supported per code and manufacturer’s specifications.

10.1.7 All piping shall be hung from structural members.

10.1.8 All CPVC piping shall be installed by persons who have been certified by the manufacturer for installation of CPVC piping.

10.1.9 All valves shall have a permanently affixed sign indicating its function.

10.1.10 Underground mains and lead-in connections shall be flushed before connection is made to overhead sprinkler piping.

10.1.11 Dedicated underground mains and lead-in connections shall be visually inspected under normal system operating pressure by the Ventura County Fire Protection District’s Fire Prevention Bureau prior to the pipe being buried.

10.1.12 A flush of dedicated underground mains and lead-in connections shall be witnessed by the Ventura County Fire Protection District’s Fire Prevention Bureau prior to connecting to the overhead fire sprinkler system.

10.1.13 The residential sprinkler system shall be tested and inspected at both rough and final stages, prior to occupancy being granted. Call one working day in advance to schedule all inspections.

CHAPTER 11 INSPECTIONS

11.1 General. The inspection fee that is paid at the time of plan submittal will provide you with a pre-determined number of inspections to complete the project (see fee schedule). For projects that exceed this limit, inspection requests will not be accepted unless additional fees are paid prior to scheduling an inspection.

11.2 Responsibility. It is the responsibility of the installing contractor/owner to be on the job site during the inspection with approved plans. Failure to do so will result in the cancellation of the inspection. Cancelled inspections will be counted as one inspection.

11.3 Inspection Requests. Inspection requests can only be taken from the installing contractor/owner. Inspections shall be requested Monday through Friday prior to 3:00 p.m., one business day prior to inspection.

It is the intent of the Ventura County Fire Protection District's Fire Prevention Bureau to perform inspections one business day after the inspection has been requested. However, due to training requirements, meetings, emergency services and other scheduled and non-scheduled events, it cannot be guaranteed that all inspections are performed next business day.

11.4 Schedule by Phone. Call (805) 389-9744 one business day prior to inspection for scheduling an inspection. The inspection request line is open Monday through Friday between 8:00 a.m. and 3:00 p.m.

11.5 Schedule by Fax. Inspections can be scheduled via fax at (805) 388-4356. Ventura County Fire Protection District's Fire Prevention Bureau Form FP13.1.3, found at http://fire.countyofventura.org must be used to request an inspection. Faxed inspection requests must be received prior to 3:00 p.m.

11.6 Contact Information. Be sure to leave your phone number when you schedule an inspection by phone or fax, where the inspector can call you back, after 7:30 a.m. the day of the inspection to notify you or your inspection time.

11.7 Inspection Times. Inspection times are approximate and may vary because of delays at previous inspections or emergency response by Fire District personnel. Please allow time on either side of the inspection time for the inspector to arrive.

CHAPTER 12 ACCEPTANCE TESTING

12.1 Rough Inspection. The sprinkler system shall be field tested and inspected at the rough plumbing stage (i.e. exposed pipe and fitting stage) by the Fire Prevention Bureau. All systems shall be hydrostatically tested (not pneumatic) for leakage at the normal system operating pressure at the rough stage.

12.2 Underground. All systems shall have an underground flush completed at time of hydrostatic test prior to connecting the underground to the overhead piping.

12.3 Bucket Test. A functional test (bucket test) shall be conducted at the rough stage from the hydraulically most demanding heads, when the overhead system is connected to the underground and the water meter is in place. The system shall meet the required flow. Exhibit A indicates how to assemble the test equipment.

12.4 Final Inspection. The sprinkler system and all of the related components shall be tested and inspected by the Fire Prevention Bureau at the final inspection stage, prior to occupancy being granted.

CHAPTER 13 MANUFACTURED HOMES

13.1 New. The Department of Housing and Community Development is responsible for plan approval, in-plant inspection, testing and installation of fire sprinkler systems installed in new manufactured housing units and multi-unit manufactured housing with two dwelling units for sale in California. Prior to shipment of a home containing a fire sprinkler system, the factory is required to affix a “Fire Sprinkler System Information and Installer Certification” label inside the unit that provides detailed information for the on-site installer and homeowner use. The label is required to be affixed on an inside wall or door of the water heater compartment.

13.2 Existing. The installation of a fire sprinkler system in an existing manufactured home or multi-unit manufactured home with two dwelling units requires prior design approval from the Department of Housing and Community Development and inspection approval of the installation prior to the installer covering the piping material with finished wall or ceiling materials. Only the occupant homeowner; a fire protection contractor holding a valid C-16 license; or a plumbing contractor holding a valid C-36 license may install a fire sprinkler system in an existing manufactured home or multi-unit manufactured home with two dwelling units.

13.3 Homeowner Responsibility. The homeowner is responsible for the following:

13.3.1 Underground supply line shall be flushed before connection is made to sprinkler riser.

13.3.2 Insure that the available water supply will meet the demand indicated on the “Fire Sprinkler System Information and Installer Certification.”

13.3.3 Hydrostatically test the sprinkler system at the maximum system pressure for 2 hours.

13.3.4 Pay inspection fees prior to scheduling a final inspection.

EXHIBIT A

Bucket Test Equipment Setup

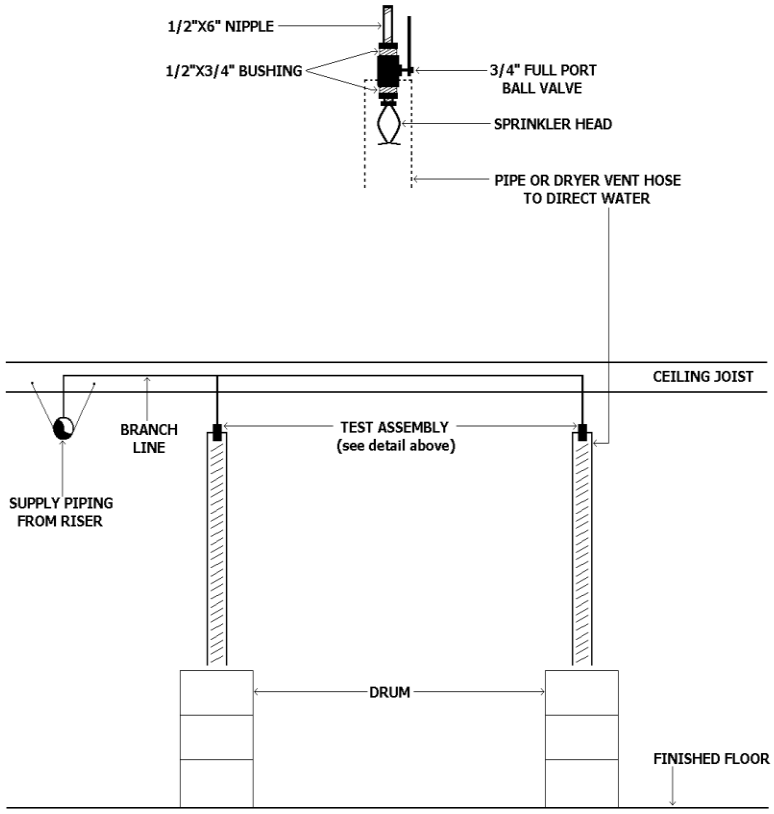

Exhibit B

Number of Design Sprinklers
Diagrams for NFPA 13D Section 10.2

For each of the following situations, the number of sprinklers in the design area shall be all the sprinklers within a compartment, up to a maximum of two sprinklers that require the greatest hydraulic demand.

Situation #1

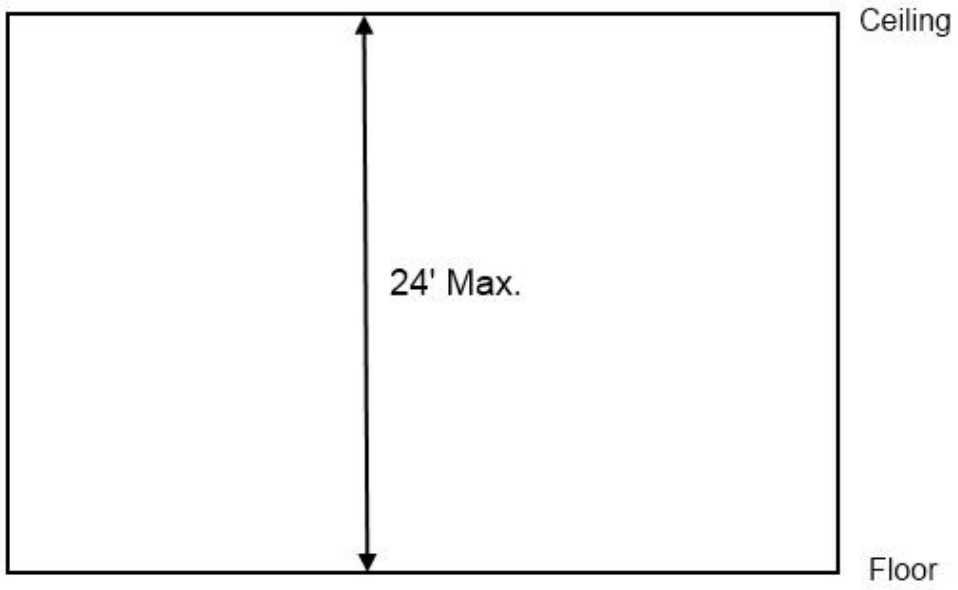

Situation #2

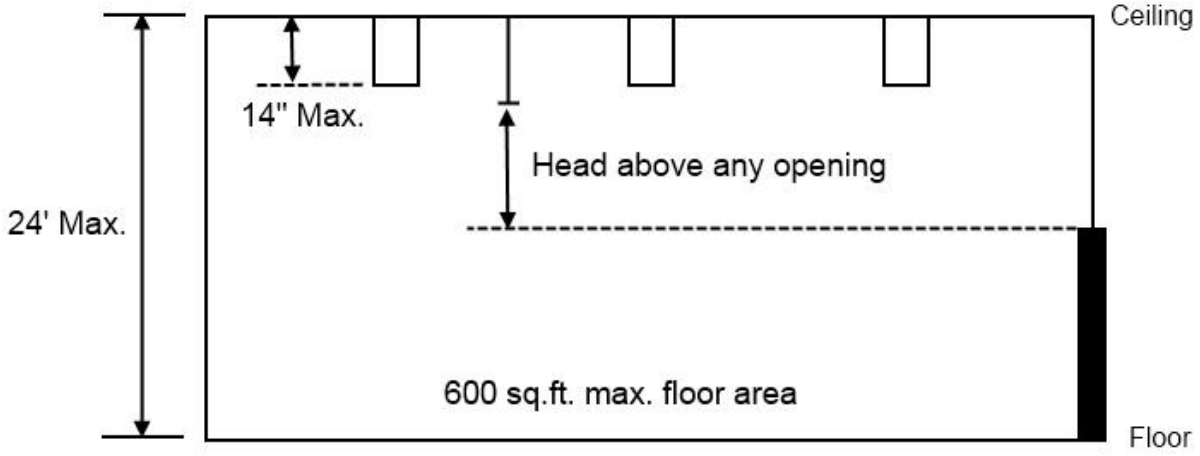

Situation #3

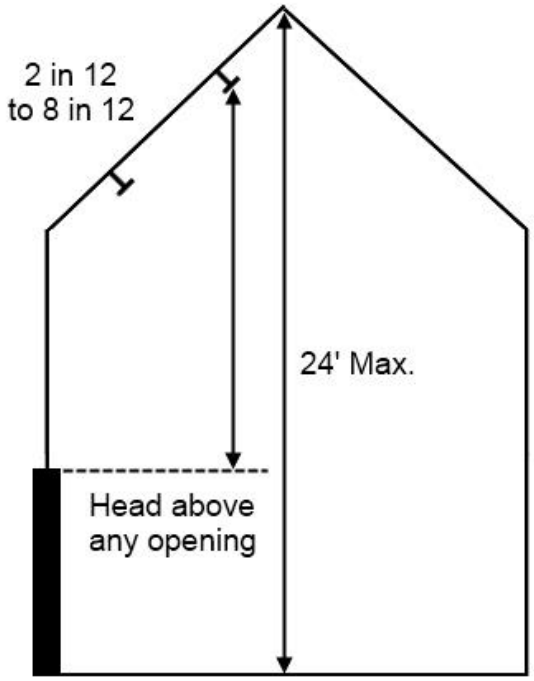

Situation #4

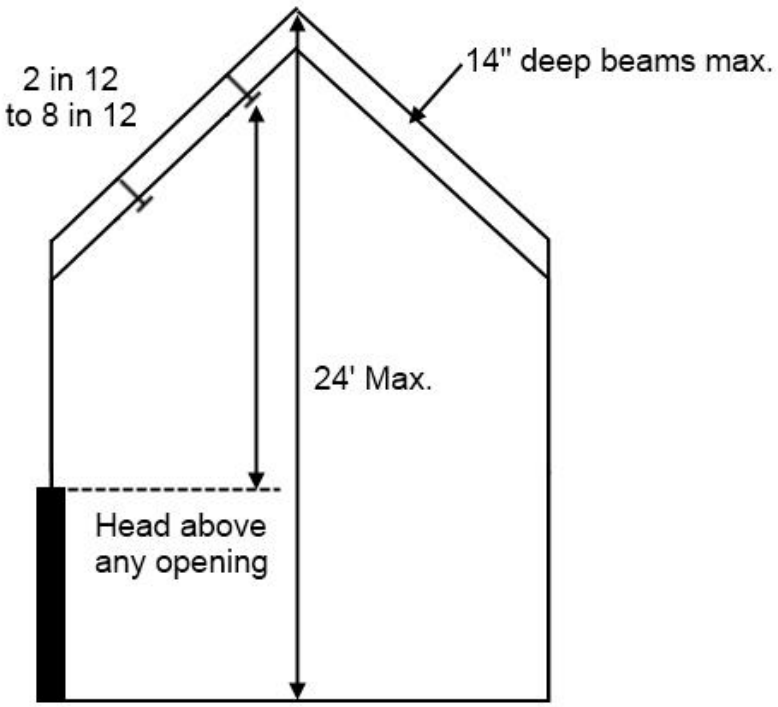

600 sq.ft. max. floor area

Situation #5

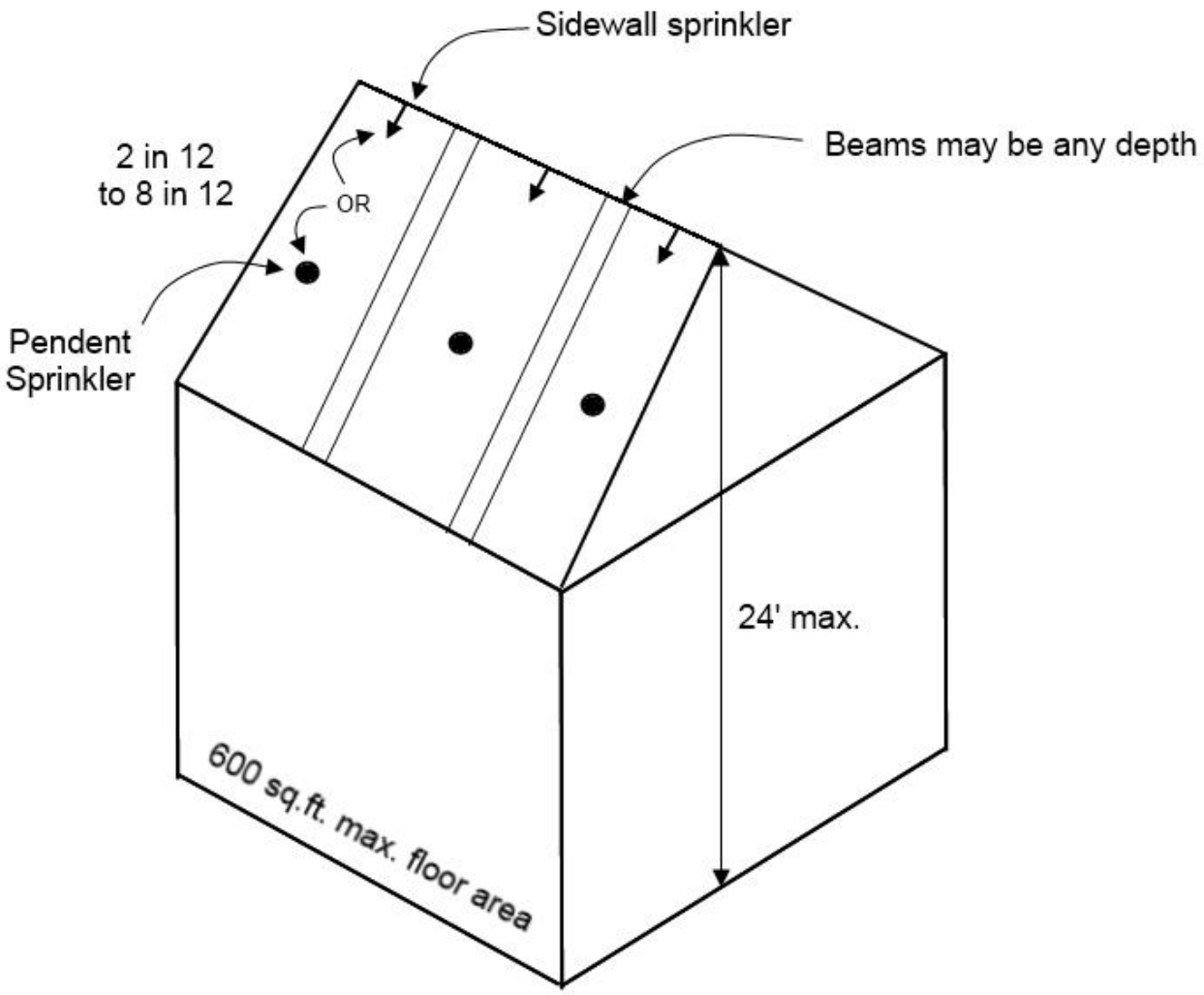

Notes:

- For situations not meeting one of the conditions listed above, then use residential sprinklers listed for use in the specific ceiling configuration.

- For situations not meeting one of the conditions listed above and there are no residential sprinklers listed for the specific ceiling configuration, the number of sprinklers in the design area shall include all sprinklers within a compartment, to a maximum of three (3) sprinklers that require the greatest hydraulic demand.